This document is the property of Nian-Yeong Corporation and is delivered on the express condition that it is not to be disclosed, reproduced or used, in whole or in part, for manufacture or sale by anyone other than Nian-Yeong Corporation without its prior consent, and that no right is granted to disclose or to use any information in this document.

CUSTOMER DRAWING

REV.	DESCRIPTION	APPVL. BY	DATE	ECN NO.
A	ADD QC plat	Fido Wang	02/12/08'	
B	ADD SALES DRAWING	Fido Wang	22/12/08'	ECN-08016
C	CHANGE DIM & LAYOUT	Fido Wang	24/03/09'	ECN-09067

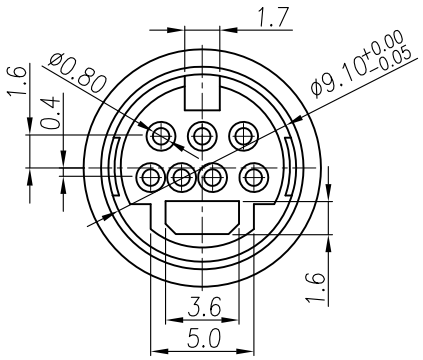

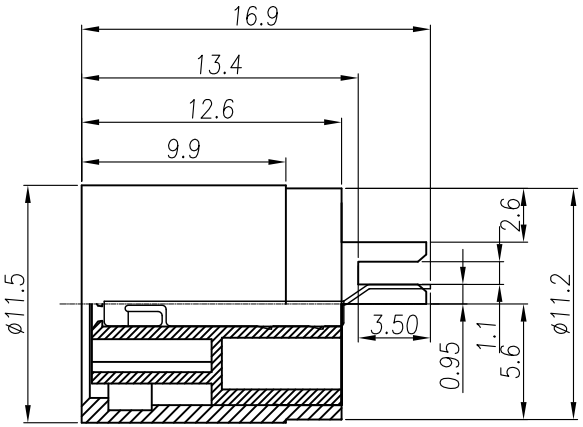

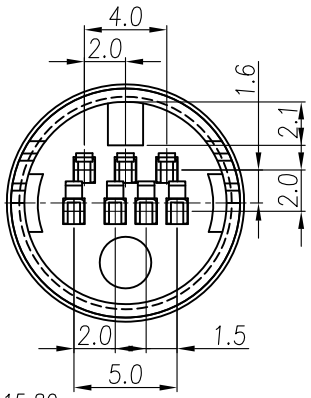

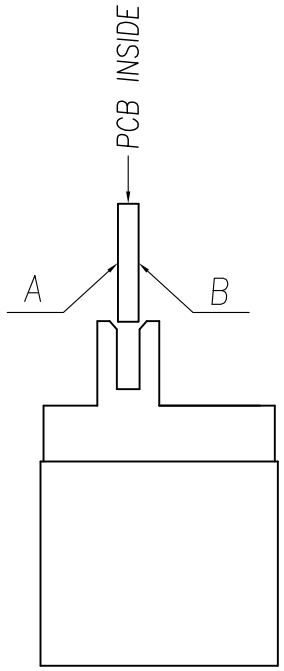

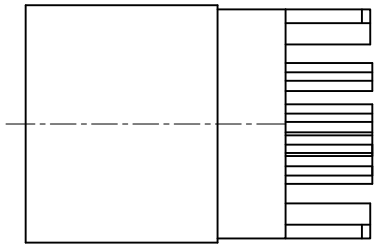

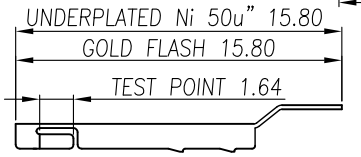

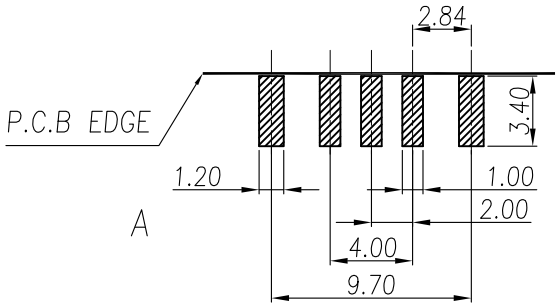

RECOMMENDED PC BOARD LAYOUT FRONT SIDE

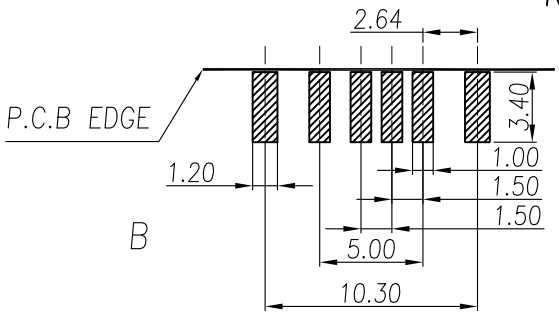

RECOMMENDED PC BOARD LAYOUT REVERSE SIDE

NOTE :

1. MATERIAL :
   - 1-1. SHELL : BRASS
   - 1-2. CONTACT : PHOSPHOR BRONZE
   - 1-3. HOUSING : PBT
2. FINISH :
   - 2-1. SHELL : NICKEL 80u" PLATED
   - 2-2. CONTACT : GOLD FLASH ON CONTACT AREA UNDER PLATED NICKEL 50u" MIN OVER ALL.

DRAW	Jen Xie	APPVL	Fido Weng	UNIT	mm	TOLERANCE .x ±0.20 .xx ±0.10 .xxx ±0.05 .xxxx ±0.03 ANGULA ±1°	NIAN YEONG ENTERPRISE 年永實業有限公司	TITLE	MiniDin 7(F)雙排夾板式			SHEET 1/1
CHECK	Emily Suen			SCALE	1:1			PART NO.	MD-07F2-03	DWG NO.	QC3038	VERSION C