This document is the property of Nian-Yeong Corporation and is delivered on the express condition that it is not to be disclosed, reproduced or used, in whole or in part, for manufacture or sale by anyone other than Nian-Yeong Corporation without its prior consent, and that no right is granted to disclose or to use any information in this document.

CUSTOMER DRAWING

REV.	DESCRIPTION	APPROVED BY	DATE	ECN NO.
C	CHANGE DIM.	Ku Chou	22/02/19'	
D	ADD 6PIN P/N	Ku Chou	06/03/19'	
E	ADD 6PIN P/N	Ku Chou	24/05/19'	

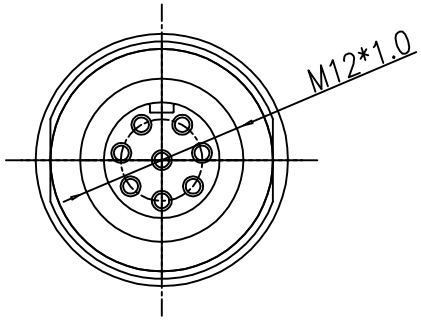

TABLE A

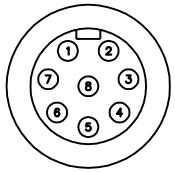	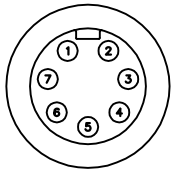	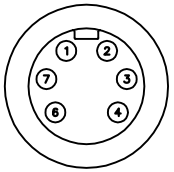	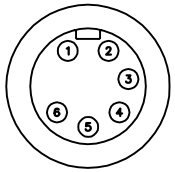
WP-08F2-104-11	7P	WP-06F2-72-11	WP-06F2-71-11
		E	D

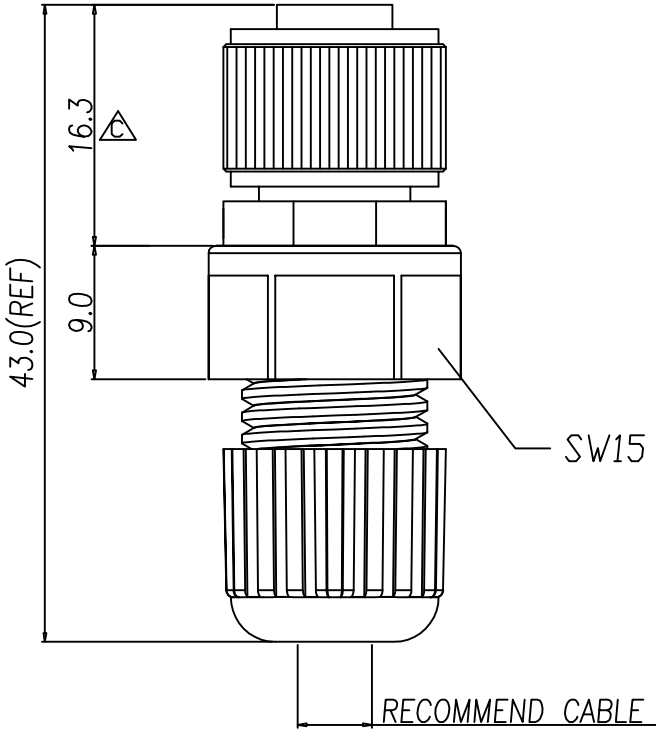

1. MATERIAL :
   - 1-1. HOUSING : PBT UL94V-0 ; COLOR : BLACK.
   - 1-2. CONTACT : BRASS
   - 1-3. SHELL : BRASS
   - 1-4. O-RING : EPDM
   - 1-5. NUT : ALUMINUM ALLOY
   - 1-6. GASKET : SILICONE
   - 1-7. CLAMP RING : PA66 B
   - 1-8. SEAL : SILICONE
   - 1-9. SEALING NUT : PA66
2. FINISH :
   - 2-1. CONTACT : GOLD FLASH PLATED.
   - 2-2. NUT : NICKEL PLATED.
   - 2-3. SHELL : NICKEL PLATED.
3. ELECTRICAL SPECIFICATION :
   - 3-1. Rated current : 2A
   - 3-2. Rated voltage : 30V
   - 3-3. Water proof : IP67
4. Environmental :
   - 4-1. Operation Temperature : -40℃~105℃

DRAWN	Emily Suen	APP'D	Ku Chou	UNIT	mm	TOLERANCE .x ±0.20 .xx ±0.10 .xxx ±0.05 .xxxx ±0.03 ANGULA ±1°	NIAN YEONG ENTERPRISE 年永實業有限公司	TITLE	M12 (F) A-coded Assembly type(塑膠本體)		SHEET 1/1
CHK'D	Ku Chou			SCALE	1:1			PART NO.	SEE TABLE A	DWG NO. QC8681	VERSION E